TECHNICAL DATA SHEET DS-151-2

ANSI/DHI A115.1 MORTISE LOCK (M) PREPARATION – 1 3/4" DOORS

14 GAUGE DOOR SHOWN
SWINGERDOR SIMILAR
(CUT OUTS AND DIMENSIONS
ARE THE SAME)

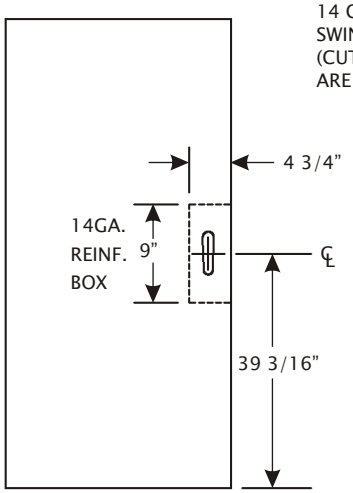

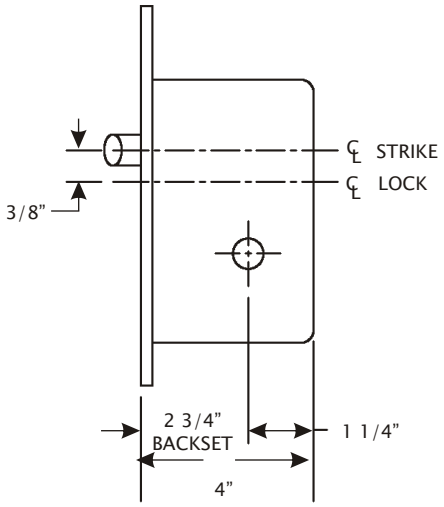

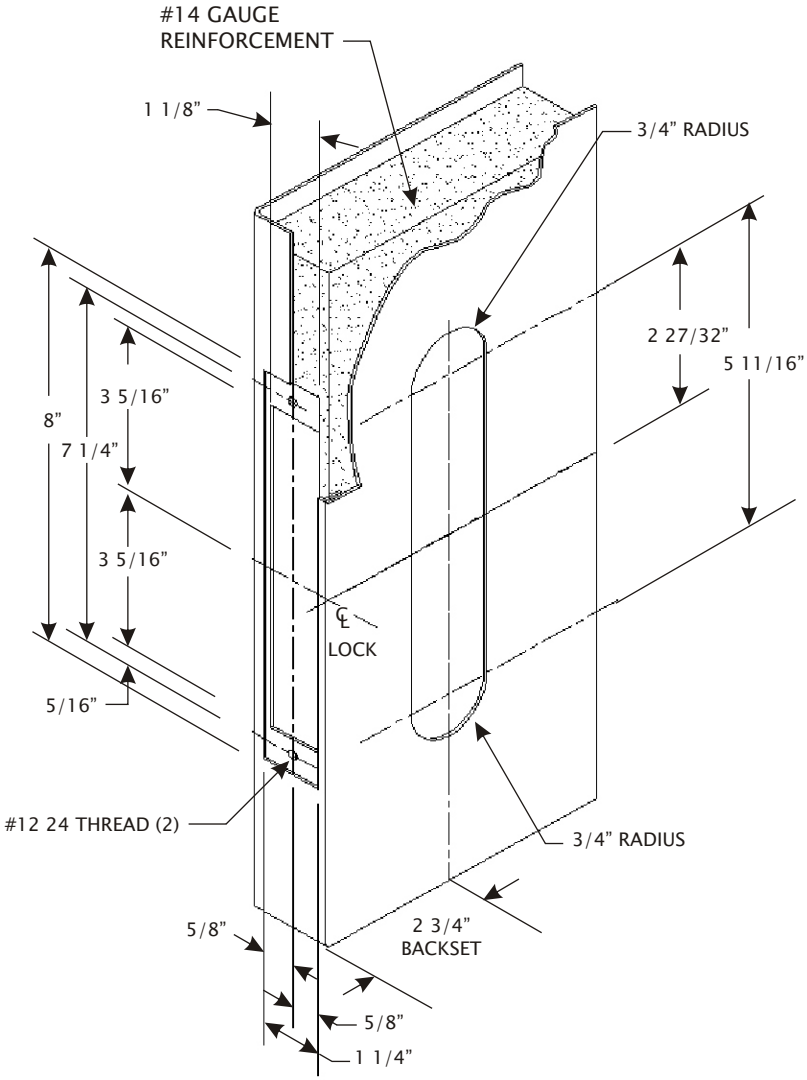

HARDWARE
January 2007

MESKER
www.meskerdoor.com
256-851-6670, 256-852-5846